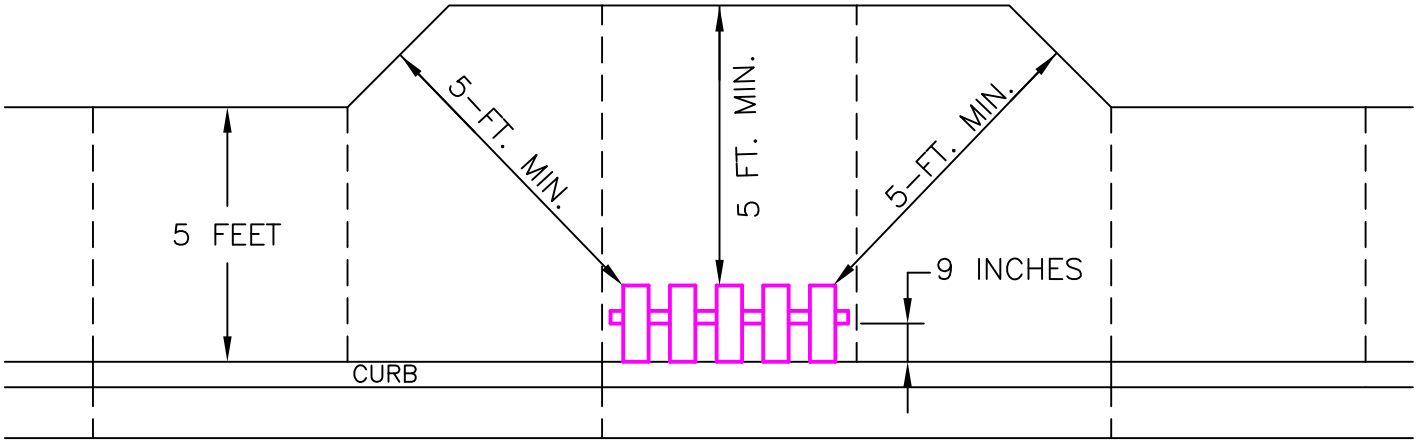

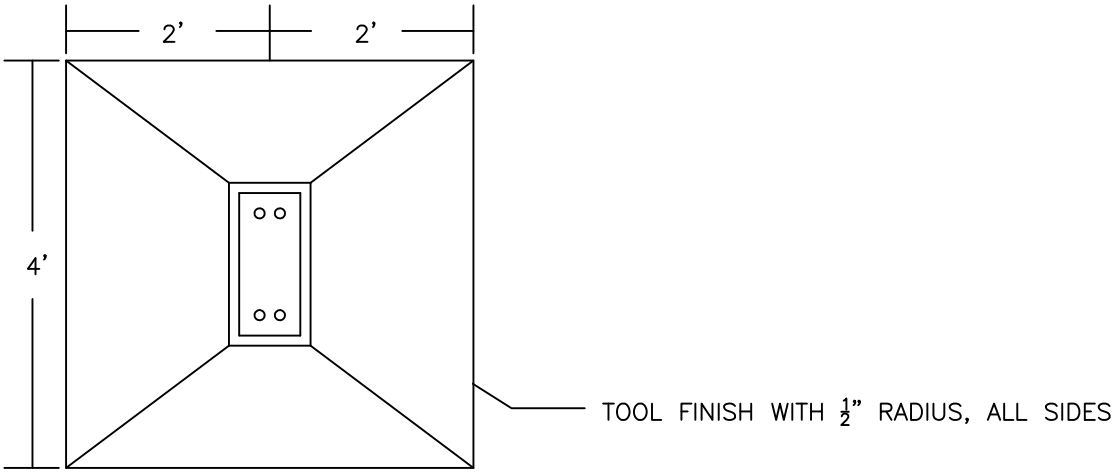

NOTES:

1. POST MOUNTING SOCKET TO BE INSTALLED 9 INCHES BEHIND BACK OF CURB.
2. BOTTOM OF MAILBOXES SHALL BE 38 INCHES TO 42 INCHES ABOVE FLOW LINE OF THE GUTTER.
3. A MINIMUM OF 5 FEET OF CLEARANCE BETWEEN MAILBOXES AND THE BACK EDGE OF THE SIDEWALK IS REQUIRED.
4. ALL CONSTRUCTION AND MATERIALS SHALL MEET THE SPECIFICATIONS AND BE APPROVED BY THE CITY OF EPHRATA.
5. ALL INSTALLATIONS SHALL BE COORDINATED WITH THE UNITED STATES POSTAL SERVICE.

MAILBOX SUPPORT SYSTEM

EPHRATA PUBLIC WORKS DEPARTMENT

DATE	REVISION	BY

DRAWN
CHECK
SCALE NTS
DATE 10/03/08

CITY OF EPHRATA
GRANT COUNTY WASHINGTON

A-7