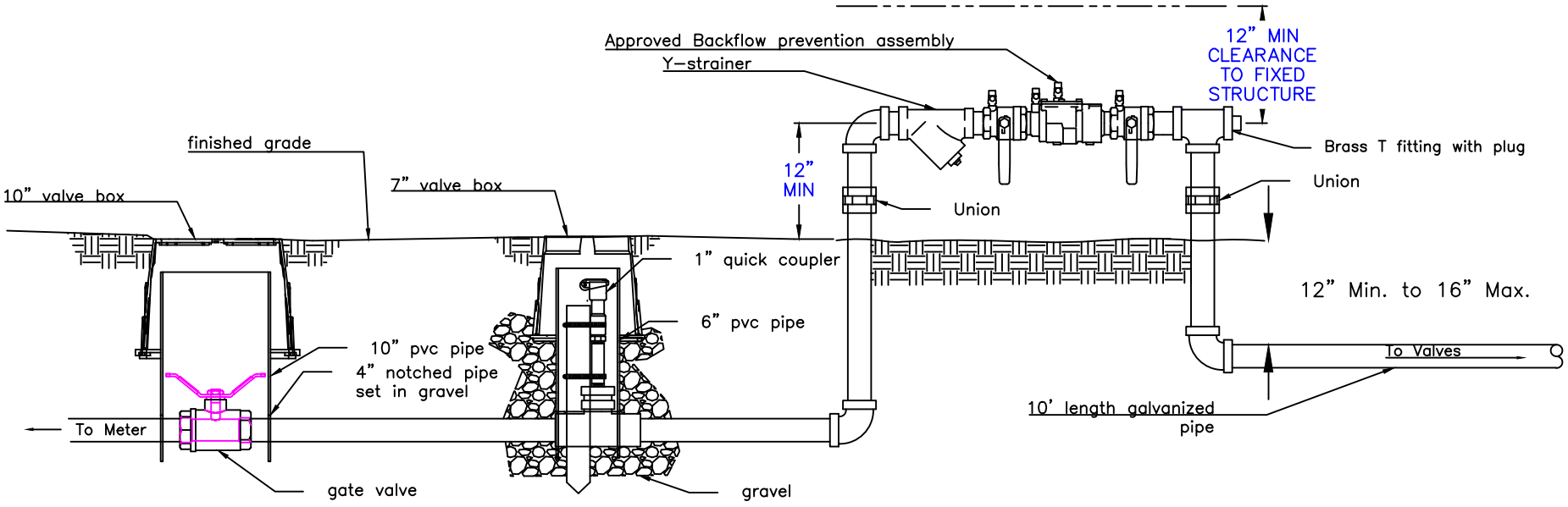

1. Typical Installation, pipe fittings to match pipe sizing upon review of water department and parks department.
2. All pipe fittings prior to valves to be brass.
3. All pipe to be galvanized steel. One ten foot length downflow from backflow assembly.
4. Mainline depth down line from backflow assembly to be a minimum of 12" below finished grade and a maximum depth 16" below finished grade.
5. Lateral depth down line from backflow assembly to be a minimum of 12" below finished grade and a maximum depth of 16" below finished grade.
6. All gate valve and ball valves shall be B & K Brass Valves or equal comparable.
7. All valve wiring shall be placed in trench prior to pipe placement. Marking tape shall be placed 2" above all pipe and wire.
8. Sprinkler or other approved blow–off assembly shall be required at end of all laterals.
9. 24" looped excess wire shall be provided in all valve boxes.
10. Valve pipe casing shall be type ASTM 3034 Sewer Pipe or approved equal.

Typical Main Line Connection

EPHRATA PUBLIC WORKS DEPARTMENT

DATE	REVISION	BY

DRAWN
CHECK
SCALE NTS
DATE 01/18/11

CITY OF EPHRATA
GRANT COUNTY WASHINGTON

I–5