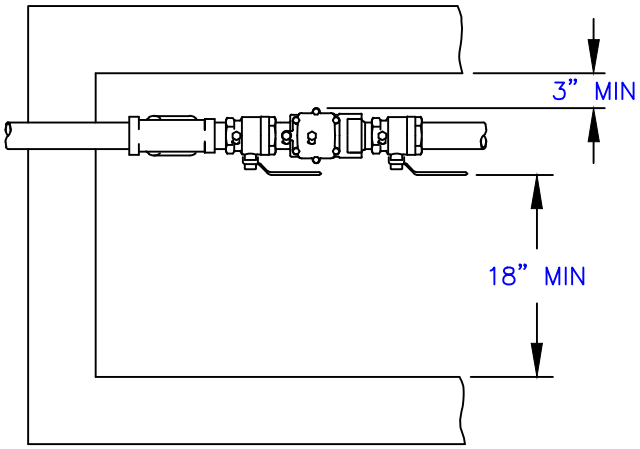

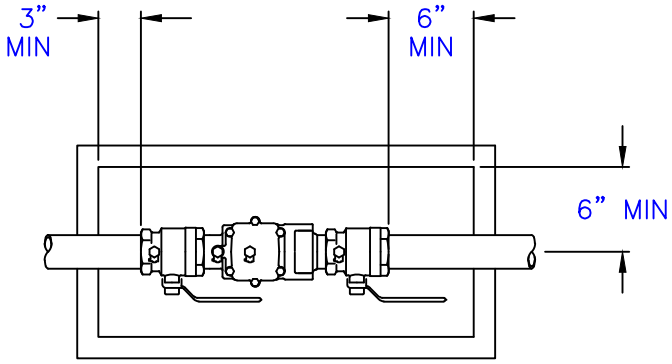

Double Check Assembly
Pit Installation

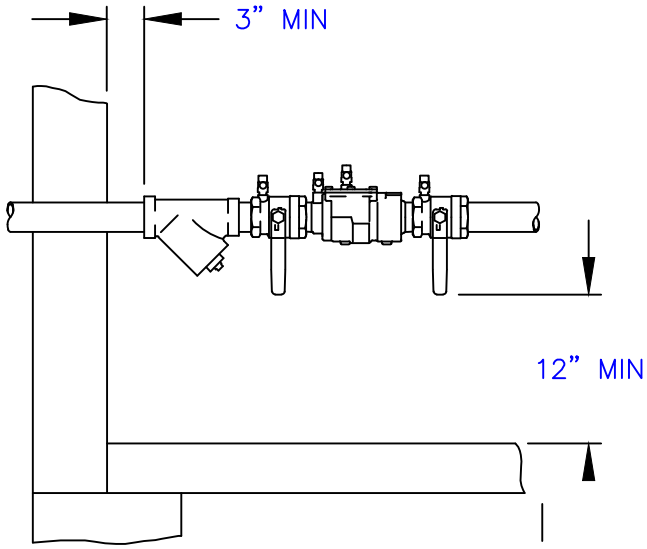

Double Check Assembly
Indoor Installation

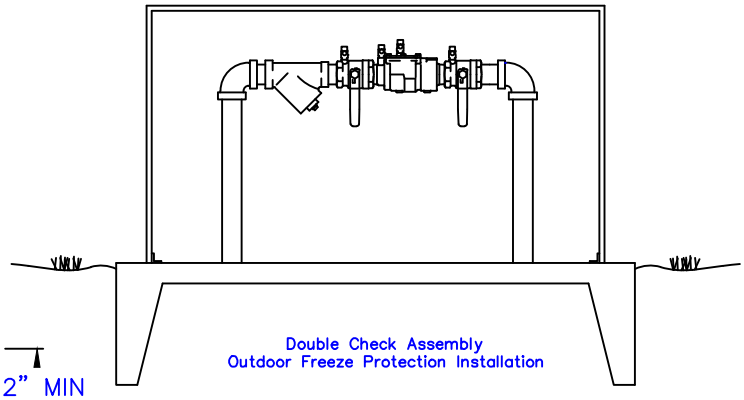

Double Check Assembly
Outdoor Freeze Protection Installation

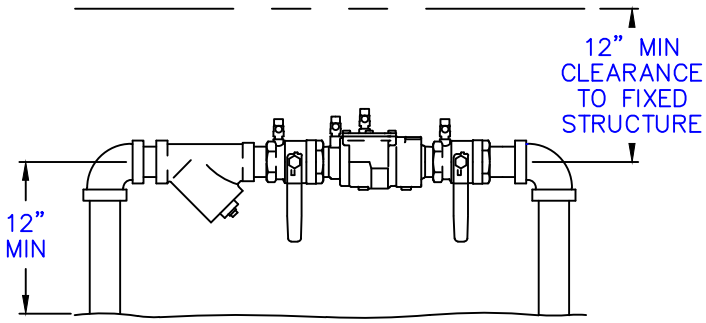

Double Check Assembly
Outside Installation

DATE	REVISION	BY

FEBCO MASTER SERIES 850
1/2 – 2 inch BACKFLOW

EPHRATA PUBLIC WORKS DEPARTMENT

CITY OF EPHRATA

GRANT COUNTY WASHINGTON

DRAWN
CHECK
SCALE NTS
DATE 12/20/10

I–2